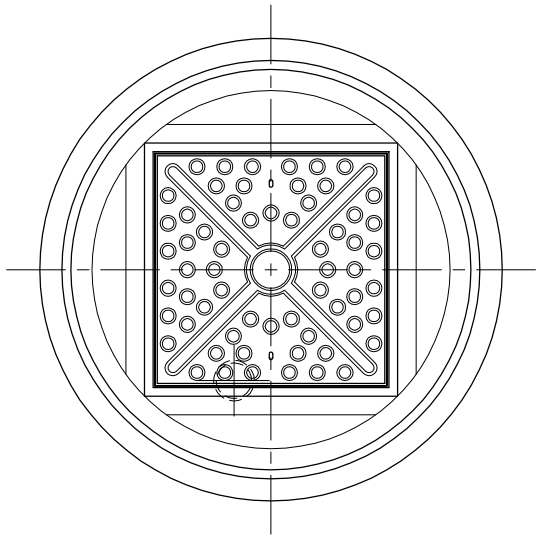

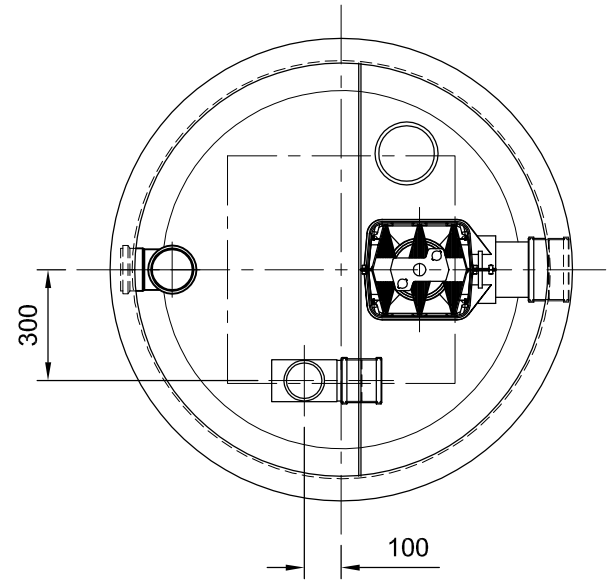

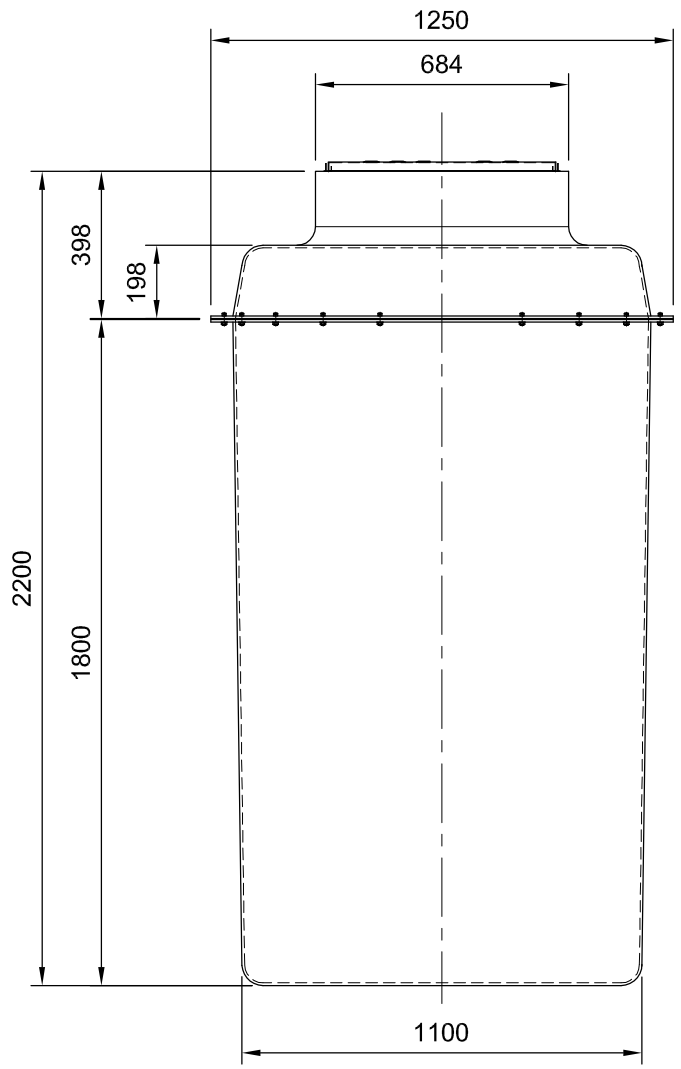

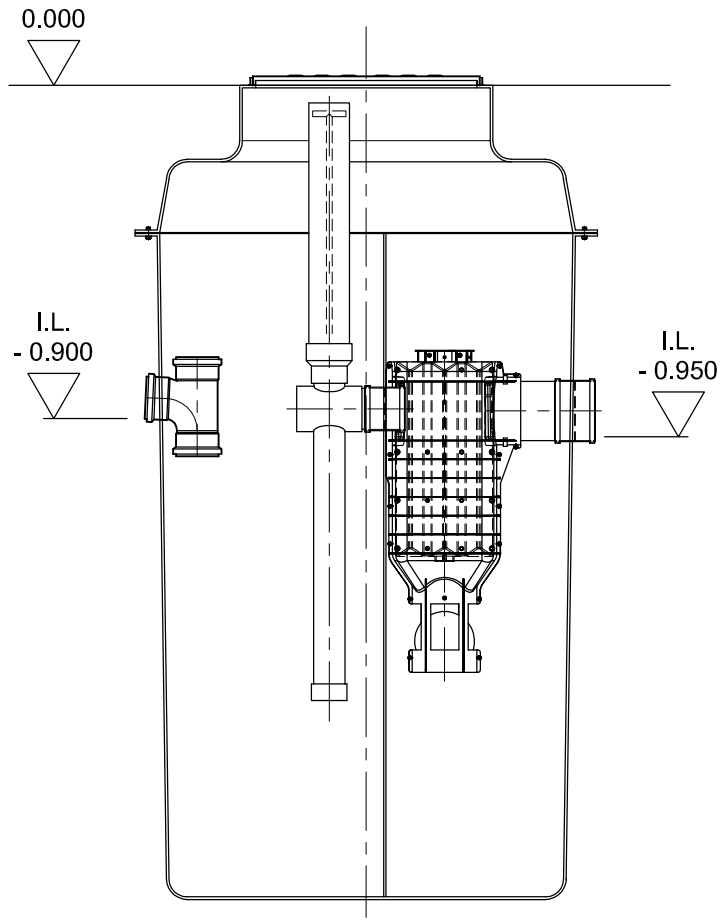

PRODUCT CODE	DIA	HEIGHT	POLYLOK FILTER	No. OF UV FILTERS	PE	WATTS
MUPUV1	1100 mm	2200 mm	525	1	50	40
MUPUV2	1100 mm	2200 mm	525	2	100	80
MUPUV3	1700 mm	2200 mm	525	3	150	120
MUPUV4	1700 mm	2200 mm	525	4	200	160
MUPUV5	1700 mm	2200 mm	525	5	250	200

NOTES:

1. THE ILLUSTRATION SHOWS A STANDARD SINGLE UV PLANT
2. INVERT DEPTHS VARIABLE
3. OTHER CAPACITY UNITS AVAILABLE

REV	DESCRIPTION	DATE	SIG	REV	DESCRIPTION	DATE	SIG	REV	DESCRIPTION	DATE	SIG
								A	For Approval	27.09.11	

THIS DRAWING IS THE PROPERTY OF MARSH INDUSTRIES LTD. AND MUST NOT BE REPRODUCED OR CIRCULATED FOR ANY PURPOSE WHATSOEVER WITHOUT FIRST OBTAINING WRITTEN CONSENT FROM THE MARSH INDUSTRIES LTD.

ORIG. MUNRO DRAUGHTING Ltd. | CHKD | APP'D | SCALE 1:10 | DATE 27.09.11

3 RD ANGLE PROJECTION | DO NOT SCALE IF IN DOUBT ASK

CLIENT

TITLE

MARSH
ULTRA POLYLOK
SINGLE ULTRA VIOLET
SEWAGE TREATMENT

MARSH
MARSH INDUSTRIES LTD.
UNITS 9-13 ADDINGTON PARK IND. EST.,
LITTLE ADDINGTON, KETTERING,
NORTHAMPTONSHIRE, NN14 4AS.

DRG. MUPUV 1-5 | REV A